ANALYSIS AND DESIGN OF LCL-TYPE SERIES RESONANT CONVERTER

A.K.S. Bhat, Senior Member IEEE,
Dept. of Elec. Engg.
Univ. of Victoria
Victoria (B.C.)
V8W 2Y2
CANADA.

ABSTRACT

A series resonant converter modified by adding an inductor in parallel with the transformer primary (or secondary) is presented. This configuration is referred to as "LCL-type series resonant converter". A simplified steady-state analysis using complex circuit analysis is presented. Based on the analysis, a simple design procedure is given. Detailed experimental results obtained from a MOSFET based 500 W converter are presented to verify the analysis. A narrow variation in switching frequency is required to regulate the output voltage constant for a very wide change in load, and the converter has load short circuit capability. It is shown that by placing the parallel inductor on the secondary-side, the parasitics of the high-frequency transformer can be used profitably.

1. INTRODUCTION

DC/DC converters are widely used in Telecommunication power systems. A literature survey of such converters is given in [1]. Due to the advantages of high-frequency (hf) resonant converters, they are finding application in telecommunication power supplies [1,3,8,9]. Most popular resonant converter configurations are series resonant [2,3] and parallel resonant. A series resonant converter has voltage regulation problem at light loads, whereas, a parallel resonant converter has lower efficiency at reduced loads due to circulating currents [2,5]. In an attempt to overcome these problems, a number of new configurations have been reported [1,4,6-9]. Although a series-parallel resonant converter (or LCC-type parallel resonant converter) [1,4,5] overcomes most of the problems of series and parallel resonant converters, load independent point of such configuration lies below resonance. Hence this type of converter requires wider change in switching frequency from full load to open circuit operation. Efficiency at light loads decreases because the converter takes the characteristics of parallel resonant converter for the values of components selected [5].

A series resonant converter has high efficiency from full load to very light loads.To overcome the problem of light load regulation of a series resonant converter, modified series resonant converters have been proposed in [8,9]. They suffer either from wide frequency control requirement [9] or poor efficiency [8]. Using the magnetizing inductance of the hf transformer, series resonant converter has been analysed in [10,11]. Analysis for below resonance (leading power factor) mode of operation has been presented using state-plane approach. In this paper a modified series resonant converter is presented. An inductotr is placed in parallel with the transformer primary or secondary winding. This converter is referred to as "LCL-type series resonant converter". Although it has been pointed out in [7] that such converter has load independent characteristics, there is no analysis or design procedure available. It is shown in this paper that this type of converter requires a very narrow range of frequency control from full load to very light loads and can operate with load short circuit while possessing the desirable features of series resonant converter. It has been shown [5] that a resonant converter operating in above resonance (lagging power factor) mode has a number of advantages (eg. no need for lossy snubbers and di/dt limiting inductors) [5]. Therefore, the proposed converter configuration is operated above resonance mode. The objectives of this paper are to present the analysis, design, and experimental results for such a converter.

The layout of the paper is as follows : Section 2 presents the detailed operation of a LCL-type series resonant converter operating above resonance. A simple analysis using complex circuit analysis is presented in section 3. A design method is presented together with a design example of 48 V, 500 Watts output converter in section 4. Experimental results obtained from an experimental converter rated at 500 watts with 48V output is presented in detail to verify the theory.

2. OPERATION OF LCL-TYPE RESONANT CONVERTER OPERATING ABOVE RESONANCE

Fig. 1 shows the basic circuit diagram of the proposed LCL-type series resonant converter. The operation of this converter operating in above resonance mode can be understood by referring to the waveforms shown in Fig. 2. Under steady-state conditions, assume that the diode D1 is carrying the resonating current. When the current through this diode goes to zero, S1 is turned on. This results in negligible turn-on losses, since the voltage across S1 is also zero at turn-on. A resonant current flows through S1, L_s, and C_s. When S1 is turned off at the end of half period, i.e. at T_s (= $1/(2f_t)$, where f_t is the triggering frequency), diode D2 turns on taking the current carried by S1. Operation during the next half cycle is similar to the first half cycle with D2-S2 pair. It is clear that there are turn-off losses associated with this type of operation. Hence it is necessary to use switches with fast turn-off times.

Since the filter capacitor C_L is large enough to maintain a constant voltage across the load R_L, the transformer secondary voltage is a square-wave whose polarity changes depending on the instant of change in polarity of current i.

3. STEADY-STATE ANALYSIS OF LCL-TYPE RESONANT CONVERTER

The steady-state analysis of LCL-type series resonant converter is presented in this section using complex ac circuit analysis. This analysis is reasonably accurate if the converter is operated above resonance, and as far as the waveforms are nearly sinusoidal. The converter gain, the peak inverter output current, the component ratings, and the region of above resonance operation are obtained.

Assumptions used in the analysis are presented in section 3.1. Section 3.2 presents the analysis of the

CH2928-0/90/0000-0172$01.00 ©1990 IEEE

converter when the effect of hf transformer is neglected. Modifications required in the analysis when the effect of hf transformer is taken in to account are presented in section 3.3.

3.1 Assumptions Used In The Analysis:

The following assumptions are used in the analysis presented in this section :

(i) The switches, diodes, inductors, and capacitors used are ideal.

(ii) The effect of snubber capacitors is neglected.

(iii) The effect of high-frequency (hf) transformer is neglected for the analysis in section 3.2. However, the effect of transformer is taken into account in sections 3.3.

(iv) Only fundamental components of the waveforms are used in the analysis.

3.2 Analysis Neglecting the Effect of HF Transformer:

Fig. 3(a) shows the equivalent circuit at the output terminals AB of the inverter assuming the hf transformer to be ideal. The corresponding ac equivalent circuit (or phasor circuit) is shown in Fig. 3(b). The rectifier, filter and load block is replaced by the ac resistance, R_{ac} given by [5]

$$R_{ac} = KR'_L \qquad (1)$$

where $K = 8/(\pi^2)$.

The different impedances and symbols used are defined below.

Triggering or switching frequency of the converter is $w_t = 2\pi f_t$ rads/sec. (2)

All the reactances are represented by letter X and the subscripts are used to represent a particular element. For example, the reactances of L_s, C_s, and the branch containing L_s and C_s, are represented by

$$X_{Ls} = w_t L_s \ \Omega, \quad X_{cs} = -1/(w_t C_s)\Omega, \quad X_s = X_{Ls} + X_{cs} \ \Omega \qquad (3)$$

Normalized switching frequencies y_e and y_s are,

$$y_e = f_t/f_e \qquad (4)$$

$$y_s = f_t/f_s \qquad (5)$$

$$w_s = 2\pi f_s = 1/\sqrt{(L_s C_s)} \quad \text{rads/s} \qquad (6)$$

$$w_e = 2\pi f_e = 1/\sqrt{(L_e C_s)} \quad \text{rads/s} \qquad (7)$$

$$L_e = L_s L_p/(L_s + L_p) \quad \text{H} \qquad (8)$$

Inorder to simplify the presentation, all the quantities are expressed in per unit and the following are chosen as the base values :

Base voltage $V_B = E = V_s/2$ V,

Base impedance, $Z_B = R'_L = n^2 R_L \ \Omega$,

Base current, $I_B = V_B/R'_L$ A.

All the per unit (p.u.) values are represented by an extra subscript "o".

The voltage gain of Fig. 3(b) can be derived as

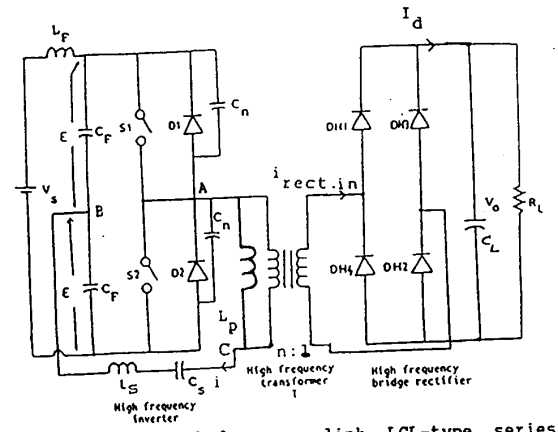

Fig. 1 A dc/dc high-frequency link LCL-type series resonant converter suitable for operation above resonance. (Here half-bridge version is shown). [Switches S1 and S2 are high-frequency switches]

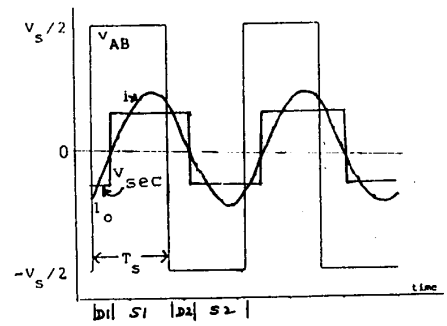

Fig. 2 Waveforms at different points in the LCL-type series resonant converter of Fig. 1 for operation above resonance.

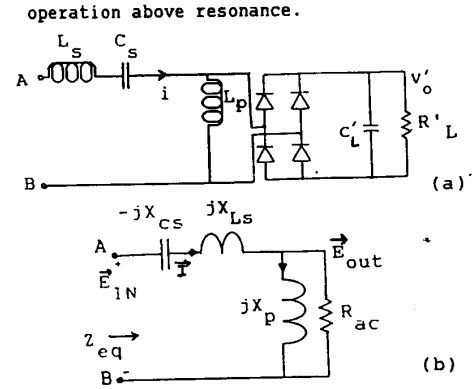

Fig. 3(a) Equivalent circuit at the output of the inverter assuming an ideal hf transformer.
(b) Model used for the analysis of the LCL-type series resonant converter shown in Fig. 1.

$$\frac{\vec{E}_{out}}{\vec{E}_{in}} = \frac{1}{(D_1 + j\,D_2)} \qquad (9)$$

where

$$\vec{E}_{in} = V_s/2 \quad \text{Volts} \qquad (10)$$

$$D_1 = 1 + (X_{so}/X_{po}) \qquad (11)$$

$$D_2 = X_{so}/K \quad (12)$$

$$X_{so} = y_e Q_s (L_s/L_e)^{1/2} - (Q_s/y_e)(L_e/L_s)^{1/2} \quad \text{p.u.} \quad (13)$$

$$X_{po} = y_e Q_s (L_s/L_e)^{1/2} (L_p/L_s) \quad \text{p.u.} \quad (14)$$

$$Q_s = (w_s L_s)/R'_L = \sqrt{(L_s/C_s)}/R'_L \quad (15)$$

Hence, the actual gain of the converter is given by

$$M = |\vec{E}_{out}/\vec{E}_{in}|/K1 \quad \text{p.u.} \quad (16)$$

where $K1 = (\pi^2/8)K$.

The equivalent impedance Z_{eqo} (in per unit) looking into the terminals AB is given by

$$Z_{eqo} = B_1 + j(X_{so} + B_2) \quad \text{p.u.} \quad (17)$$

where

$$B_1 = (1/K)/[(1/K^2) + (1/X_{po}^2)] \quad (18)$$

$$B_2 = (1/X_{po})/[(1/K^2) + (1/X_{po}^2)] \quad (19)$$

The peak inverter output current (same as current through inductor L_s and C_s) is given by

$$I_{po} = 4/(\pi \cdot |Z_{eqo}|) \quad \text{p.u.} \quad (20)$$

The same peak current flows through the switching devices.

The value of initial current, I_{0o} is given by

$$I_{0o} = I_{po} \sin(-\phi) \quad \text{p.u.} \quad (21)$$

where

$$\phi = \tan^{-1}[(X_{so} + B_2)/B_1] \quad \text{rads.} \quad (22)$$

where B_1 and B_2 are given by eqns. (18) and (19).

If I_{0o} is negative, then forced commutation is necessary and the converter is operating in above resonance (lagging power factor) mode.

The peak voltage across the capacitor C_s and the peak current through the inductor L_p are

$$V_{cspo} = X_{cso} \cdot I_{po} \quad \text{p.u.} \quad (23)$$

$$I_{Lpo} = |Z_{po}| I_{po}/X_{po} \quad \text{p.u.} \quad (24)$$

where

$$|Z_{po}| = X_{po}/[1 + (X_{po}/K)^2]^{1/2} \quad \text{p.u.} \quad (25)$$

3.3 Modifications Required When The Effect Of HF Transformer is Taken in to Account:

3.3.1 Inductor L_t on Primary-Side:

Fig. 4(a) shows the equivalent circuit across AB, when the effect of hf transformer is taken into account and now the actual parallel inductor used is L_t. The hf transformer is represented by its T-equivalent circuit. L_{lp}, L'_{ls}, and M are the leakage inductance of primary, primary referred leakage inductance of the secondary, and the mutual inductance of the transformer, respectively.

Using the Δ-Y transformation for the L_t, L_{lp} and M circuit, simplified equivalent circuit shown in Fig. 4(b) is obtained. In this circuit,

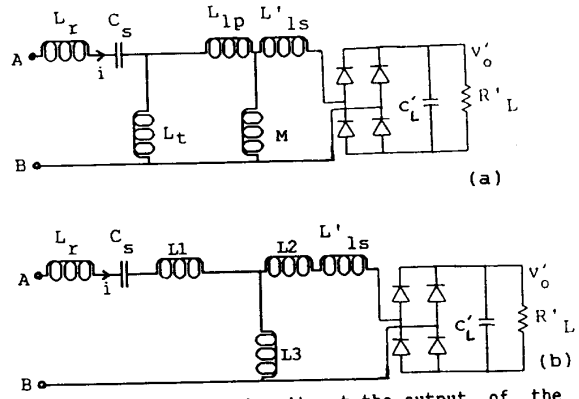

Fig. 4(a) Equivalent circuit at the output of the inverter (across AB) including the effect of hf transformer when L_t is placed across the primary-side.
(b) Simplified circuit of Fig. 4(a) after Δ-Y transformation.

$$L1 = L_{lp}L_t/(L_{lp}+L_t+M), \quad L2 = L_{lp}M/(L_{lp}+L_t+M) \quad (26)$$

$$L3 = L_t M/(L_{lp}+L_t+M) \quad (27)$$

The effective series resonating inductor has a value of

$$L_s = L_r + L1 \quad \text{H.} \quad (28)$$

where L_r is the externally added inductor. The actual parallel inductor has a value of

$$L_p = L3 \quad \text{H.} \quad (29)$$

If the effect of $(L2 + L'_{ls})$ is neglected, then the circuit shown in Fig. 4(b) is of the same form as that of Fig. 3(a). The analysis can be easily modified to take into account the effect of $(L_2 + L'_{ls})$ also.

3.3.2 Inductor L_t On Secondary-Side:

The modifications required when the parallel inductor L_t is placed across the secondary-side of the hf transformer is shown in Fig. 5(a). In this case, the equivalent circuit across AB can be written as shown in Fig. 5(b). Fig. 5(c) shows the simplified circuit after Δ-Y transformation to the M, L'_{ls} and L'_t $(=n^2L_t)$ network. Here

$$L1 = L'_{ls}M/(L'_{ls}+L'_t+M), \quad L2 = L'_{ls}L'_t/(L'_{ls}+L'_t+M),$$

$$L3 = L'_t M/(L'_{ls}+L'_t+M) \quad (30)$$

The effective series resonating inductor and the effective parallel inductor have values of

$$L_s = L_r + L_{lp} + L1, \quad L_p = L3 \quad (31)$$

The analysis presented above is used in designing the converter in the next section.

4. DESIGN

A design procedure is illustrated below with a design example.

It is required to design a 500 W converter with the following specifications :

Minimum input supply voltage, V_{smin} = 230 V,

minimum load resistance, R_L = 4.6 ohms,
load voltage, V_0 = 48 V,
switching frequency at full load with minimum input voltage, f_t = 100 kHz.

The converter gain (normalized output voltage) of the converter (eqn. (16)) and the total kVA rating of the tank circuit per kW of output power are plotted in Figs. 6 and 7 for various values of inductor ratios with variations in Q_s and y_e. The region of above resonance was detected using eqn. (21). It must be noted that as the ratio L_s/L_p approaches zero, converter takes the characteristics of an ideal series resonant converter, i.e. voltage regulation at light loads requires very high switching frequency. As L_s/L_p increases, the converter gain remains constant for a very large change in the load (eg. see L_s/L_p = 1). But the kVA/kW increases as the value of inductor ratio increases (Fig. 7). Also, for a given inductor ratio, for higher values of Q_s, the kVA/kW rating of the tank circuit is high. The load independence point for different inductor ratios occur at switching frequencies where resonance (lagging pf) mode of operation begins. In practice, for reliable operation, enough margin must be given for the switches to turn-off and also to ensure the operation above resonance. These constraints give the following as the near optimum values.

L_s/L_p = 0.2, y_e = 1,

Fig. 8 shows the plot of inverter peak output current versus y_e for various values of Q_s for an output power of 500 Watts. To ensure low peak current at full load, as well as lower peak currents at light loads, a value of Q_s = 1 was chosen.

Corresponding to these values,
primary referred normalized output voltage = 0.946 p.u.

Taking minimum value of the input voltage as the base value, V_B = 115 V, and taking in to consideration the rectifier diode drops, transformer turns ratio required is ≃ 2.176.
Primary referred load resistance, R'_L = 23.65 .
The values of L_s, C_s, and L_p can be obtained by solving

$\sqrt{(L_s)/C_s}$ = 1 x 23.64 ohms, and

$w_e = 1/\sqrt{(L_e.C_s)} = 2\pi \times 100000/1$ rad/s.

$L_e = L_s/1.2$ (using (8))

Solution of the above equations give

$L_s \simeq 41.22\ \mu H$ and $C_s \simeq 0.0738\ \mu F$.

Since L_s/L_p = 0.2 is chosen, L_p = 206 μH.

The peak value of current to be carried by the switches, the inductor L_s, and the capacitor C_s is obtained from Fig. 8 as approximately I_p = 7.3 A. The peak voltage across C_s and peak current through L_p are (using (23) and (24))

$V_{csp} \simeq 157.6$ V.

I_{Lp}(on secondary-side) ≃ 2.42 A.

For a practical 100 kHz transformer having a turns ratio of 16:7, measurements gave the following values:

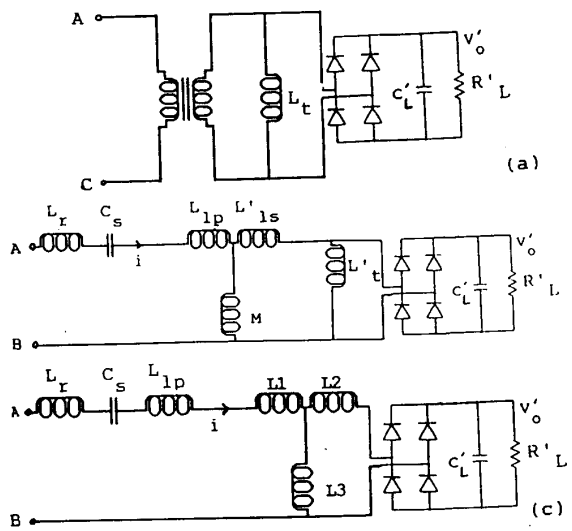

Fig. 5(a) Modification required in Fig. 1 when the parallel inductor is placed on the secondary-side of the hf transformer.
(b) Equivalent circuit at the output of the inverter (across AB) including the effect of hf transformer with the parallel inductor on the secondary-side of the hf transformer.
(c) Simplified circuit of Fig. 5(b) after Δ-Y transformation.

$L_{1p} = L'_{1s} \simeq 3.8\ \mu H$, M = 1800 μH.

If the parallel inductor is placed on the primary-side, then

L_p = L3 = 206 μH

Using (27) and (26),

L_t = 233.12 μH, L1 = 0.4349 μH, L2 = 3.358 μH.

Therefore, $L_r = L_s$ - L1 = 40.785 μH.

It can be seen that the effect of transformer on the value of L_r is negligible, whereas, (L2 + L'_{1s}) (=7.16 μH) is in series with R_{ac}.

If the parallel inductor is placed across the secondary-widnding, then the value of L_t reflected to the primary-side is given by (using (30))

L_t = 233.12 μH.

Also, L1 = 3.358 μH, L2 = 0.4349 μH.

Therefore, the effect of L2 is negligible and the value of L_r required is

L_r = 37.86 μH,

and the value of actual L_t used on the secondary-side is

$L_t = L'_t/n^2$ = 44.62 μH.

Hence, the transformer parasitics can be used profitably in this case and the performance of the converter is very close to that of an ideal case.

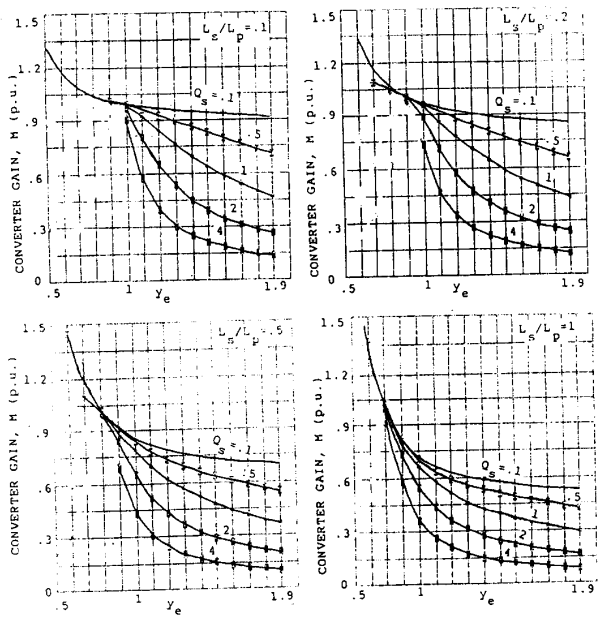

Fig. 6 The converter gain, M (p.u.) (normalized output voltage) versus normalized switching frequency (y_e) of LCL-type series resonant converter operating above resonance for different inductor ratios.

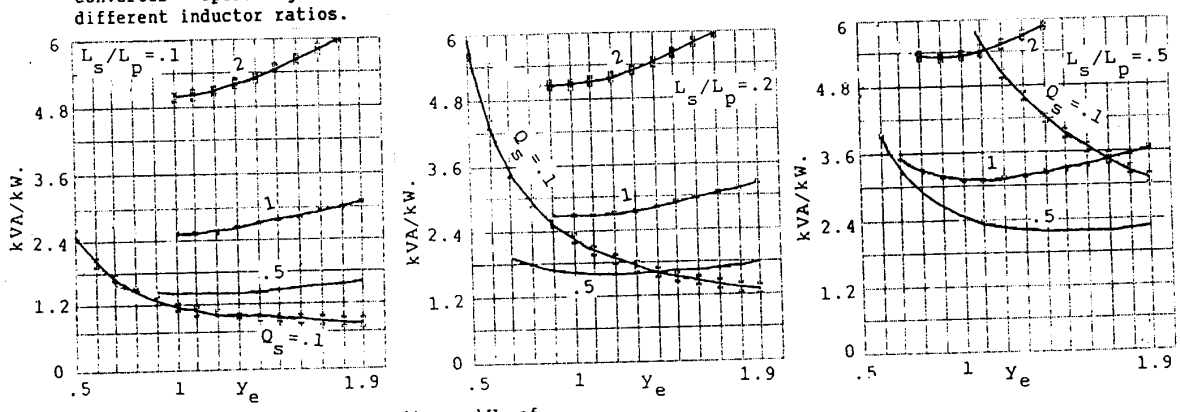

Fig. 7 Total kVA rating of tank circuit per kW of output power for variation in y_e for various inductor ratios.

5. EXPERIMENTAL RESULTS

Experimental results obtained with an experimental LCL-type resonant converter are presented in detail in this section.

The details of the 500 W converter used are given in Fig. 9. The parallel inductor was placed on the secondary-side of the hf transformer. The step-down hf transformer used has a turns ratio of 16:7. The transformer was built using two C-cores (manufactured by Tokin Coporation, 2500B2 Ferrite material) and had the leakage and magnetizing inductances given in the design example.

The load voltage was regulated to an approximate value of 48 volts by increasing the switching frequency (for variations in the load or input supply voltage). The different waveforms obtained are shown in Figs. 9 and 10. Fig. 9 shows the operating waveforms with fixed input voltage (230V) for various load conditions (from full load to about 6% load).

It must be noted that the inverter output current decreases with the load. For example, the peak current changes from about 7.5A at full load (Fig. 9(a)) to less than about 1A at approximately 6% load (Fig. 9(d)). The frequency variation required to keep the output voltage constant was about 97.5 kHz at full load to about 133 kHz at 6% load.

A short circuit was applied across the output of the rectifier with the converter operating with an input voltage of 230 V. The converter can withstand such short circuit as demonstrated in Fig. 10(a). Switching frequency corresponding to such load short circuit was about 139 kHz. The inductor peak current was much lower than that at full load for this condition.

6. CONCLUSIONS

A modified series resonant converter which employs LCL-type tank circuit and operating above resonance (lagging power factor) mode has been presented. This converter has a number of desirable features and can be conveniently employed in Telecommunication power supplies. The converter has been analysed using complex ac circuit analysis. It has been shown that placing the parallel inductor across the secondary-side of the hf transformer results in the characteristics of a nearly ideal LCL-type converter. The leakage and magnetizing inductances are used profitably as part of tank circuit inductors. Also, the value of inductor required on the secondary-side for step down converters is smaller than that required on the primary-side. Design curves for converter gain, kVA rating of tank circuit per kW, and inverter output peak current have been obtained. A simple design procedure has been illustrated with a design example. Detailed experimental results obtained from a 500 W, 48 V output experimental unit have been presented to verify the realization of the proposed converter. Only small variation in switching frequency was required to regulate the load voltage from full load to very light load. The inverter peak current decreases with the load, and hence, the converter has a high efficiency for wide variation in the load current. The converter can withstand load short circuits without any damage, if the switching frequency is increased slightly above that required for full load operation.

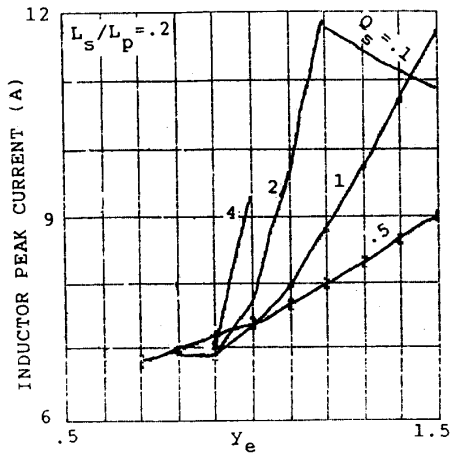

Fig. 8 The peak inverter output current (i.e. current through inductor L_s) versus y_e for an inductor ratio of L_s/L_p = 0.2 with an output power of 500 W.

REFERENCES

[1] A.K.S. Bhat, "A 48V output DC-to-DC resonant converter suitable for telecommunication applications", IEEE INTELEC, Oct. 1989, pp. 20.4.1-20.4-8.

[2] K. Kit Sum, "Recent Developments in Resonant Power Conversion", Intertech Communications Inc., 1988.

[3] Jan Tips, "A 48 V/100A Rectifier, Using the Switched-Mode Series-Resonance Principle", IEEE INTELEC-87, pp. 109-114.

[4] A.K.S. Bhat and S.B. Dewan, "Analysis and Design of a High-Frequency Link Converter Using LCC-Type Commutation", IEEE Transactions on Power Electronics, Oct. 1987, Vol. PE-2, No. 4, pp. 291-301.

[5] R.L. Steigerwald, "A Comparison of Half-Bridge Resonant Converter Topologies", IEEE Transactions on Power Electronics, Vol. PE-3, No. 2, April 1988, pp. 174-182.

[6] A.K.S. Bhat, "A unified approach for the steady-state analysis of resonant converters", Proceedings of the International Power Electronics Conference, Tokyo, April 1990, pp. 191-197.

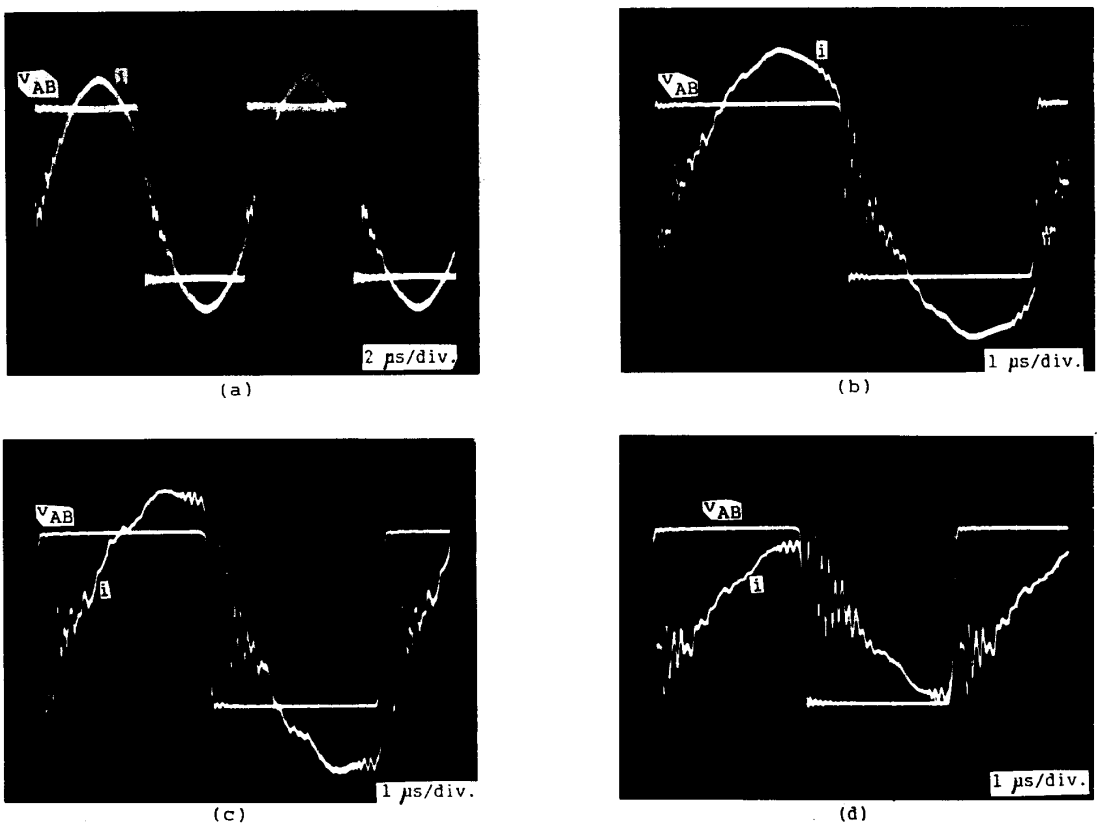

Fig. 9 Experimentally obtained waveforms, v_{AB} and inverter output current i:
(a) Full load (R_L = 5.05 Ohms), (b) Half load (R_L = 10.1 Ohms), (c) R_L = 24.16 Ohms, (d) R_L = 80 Ohms.

Voltage scale: v_{AB} (50 V/div.), Current scale: i (2.5A/div.in (a), 1A/div. in (b), 0.5A/div. in (c) and (d)). [Details of converter : Switches used - MOSFETs Motorola MTM15N50, Feedback diodes - internal to the MOSFETs, Input dc voltage ≃ 230 V, L_r ≃ 46 μH, C_s = 0.058 μF, L_t (on secondary side) = 50 μH, rectifier bridge diodes - BYW 31/200, C_L = 10 μF, HF transformer turns ratio, n = 16:7].

[7] R. Severns, "Topologies for three element resonant converters", IEEE Applied Power Electronics Conference Record, 1990, pp. 712-722.
[8] S. Muroyama and K. Sakakibara, "Characteristics of a New Series Resonant Converter", IEEE INTELEC, 1982, pp. 111-116.
[9] Y. Kuwata, Y. Ohashi, and K. Yotsumoto, "Characteristics of a new series-resonant circuit", IEEE INTELEC, 1987, pp. 204-210.
[10] Kojori, H.A., Dewan, S.B. and Lavers, J.D., "Steady-state analysis and design optimization of an inductor-transformer resonant dc-dc converter", IEEE Industry Applications Society Conference Record, 1987, pp. 984-989.
[11] Kojori, H.A., Lavers, J.D., and Dewan, S.B., "State-plane analysis of a resonant dc-dc converter incorporating integrated magnetics", IEEE InterMag Conference Record, 1988.
[12] R.J. King and R.L. Laubacher, "A Modified series resonant dc/dc converter", IEEE PESC Record, 1986, pp. 343-350.

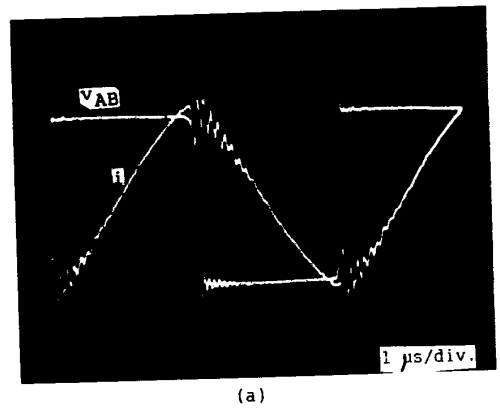

(a)

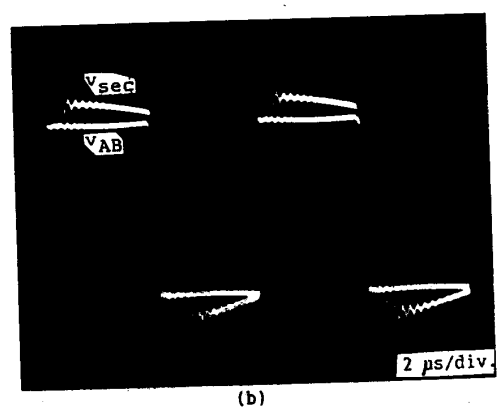

(b)

Fig. 10 Experimentally obtained waveforms, (a) v_{AB} (50V/div.) and inverter output current i (2.5A/div.) with a direct short across the load, (b) v_{AB} and voltage across the hf transformer secondary (v_{sec}, 20V/div.) [Details of the converter: same as Fig. 9].